GLASSFAB TEMPERING SERVICES

PART NUMBERS: HSSP & HBSP
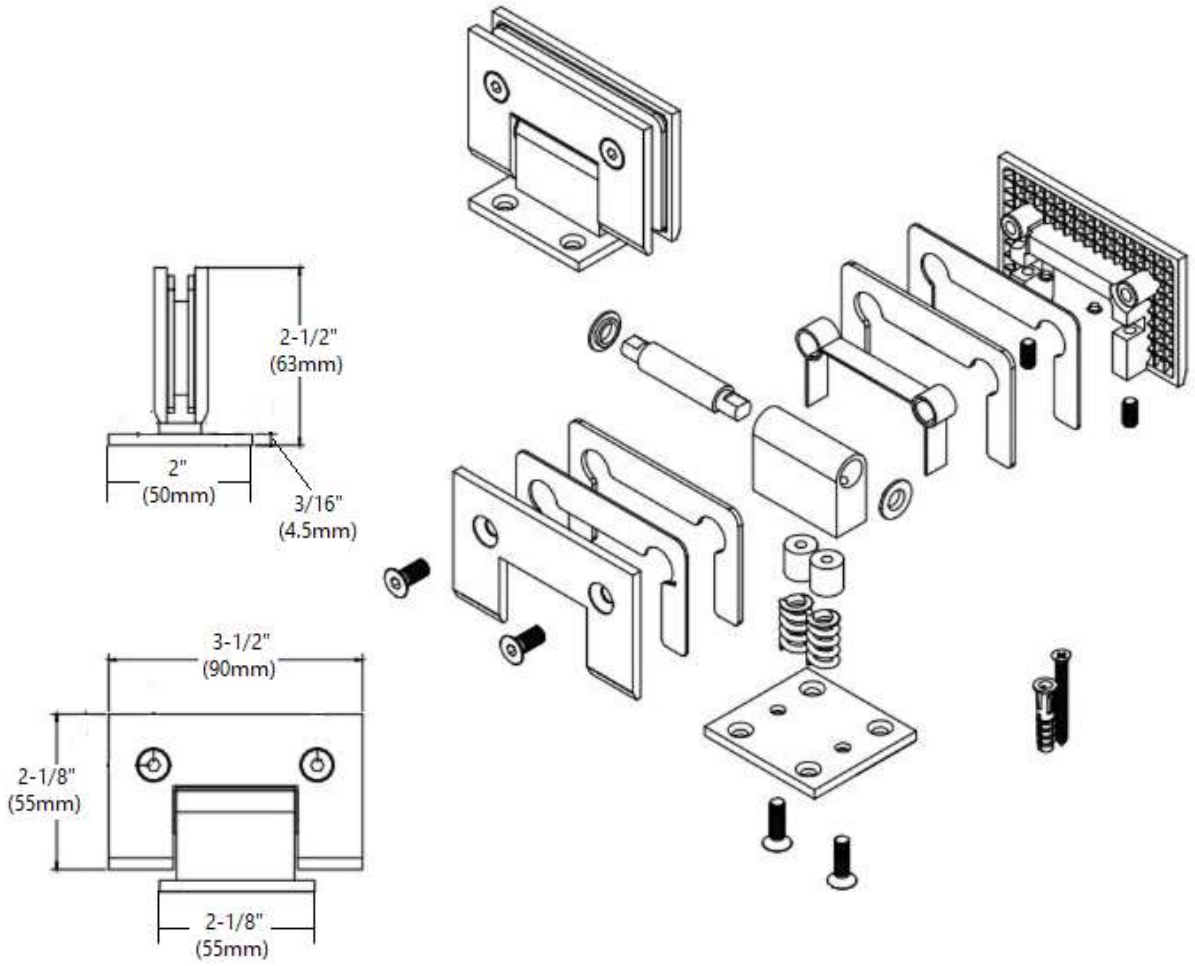
DRAWING NOT TO SCALE