35067-Standard Duty Pivot Hinge SQ

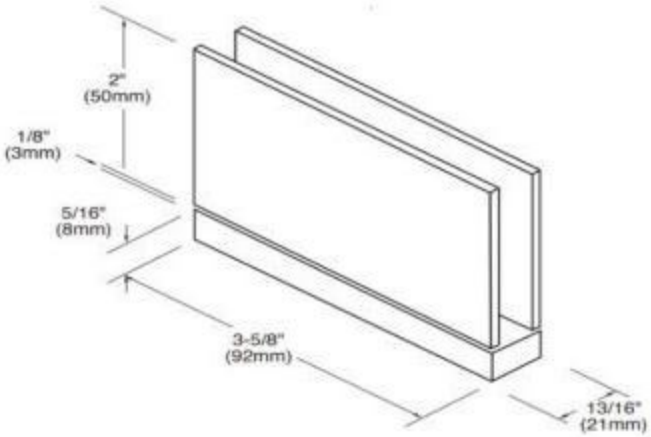

Material: Solid Brass

Glass Thickness:

5/16"(8mm) – 3/8" (10mm)

Max Door Weight: 45Kgs (100lbs)

Max Width: 30 inches (762mm)

Mount Type: Top/Bottom

Auto Function: Self Centre at 15°

Available Finishes

CH BN MB

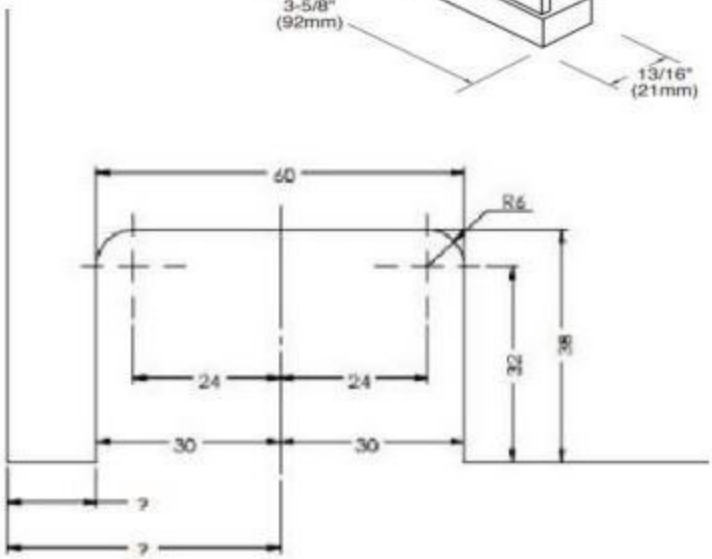

This measurement varies depending on the amount to inset you desire.

Notes:

1.Do not exceed either maximum weight or width when choosing proper quantity of hinges.

2.Gaskets should be added between glass and shower hinges according to glass size.

3. All the screws should be fastened and ensure no loosening or sliding in use.

4. Regular maintenance should be carried out during the use of shower hinges

5. The shower hinges are only for use on tempered glass.